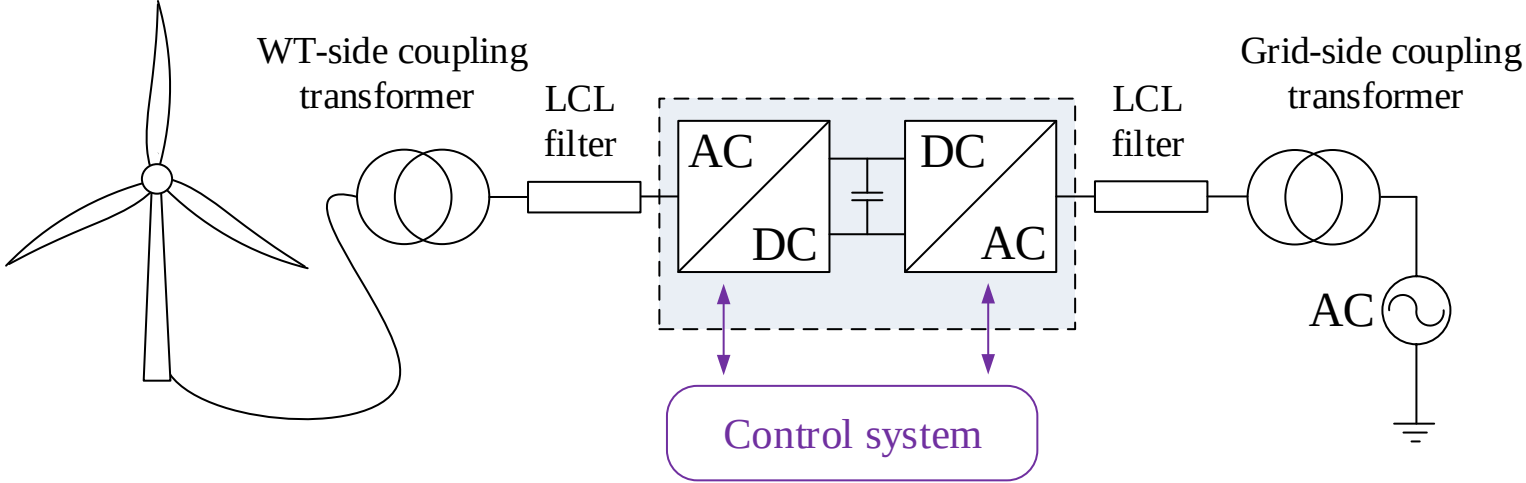
WT-side coupling transformer
LCL filter
AC
DC
DC
AC
LCL filter
Grid-side coupling transformer
AC
Control system