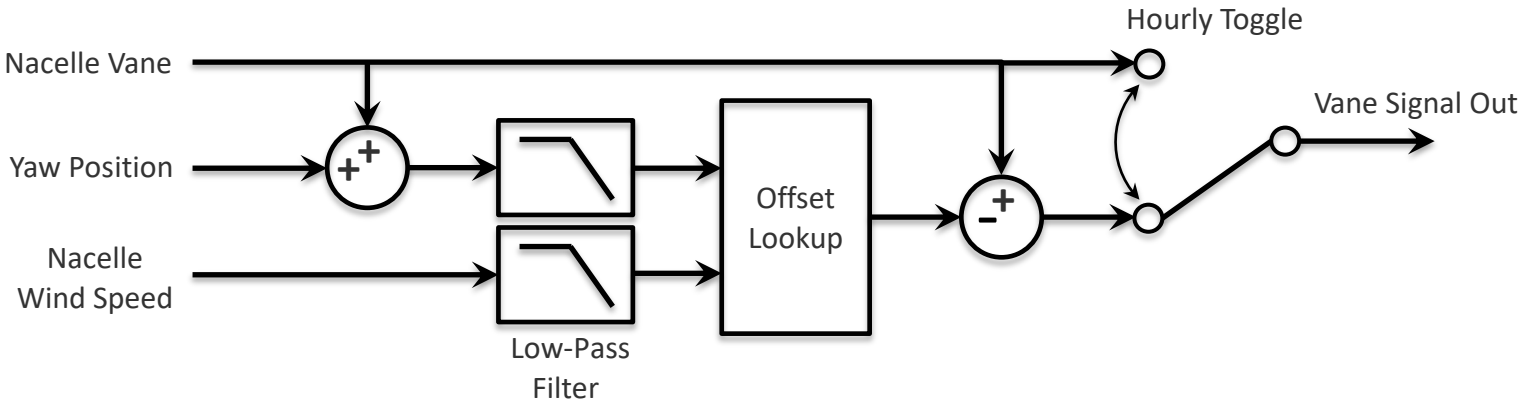
Hourly Toggle
Nacelle Vane
Vane Signal Out
Yaw Position
Offset
Lookup
Nacelle
Wind Speed
Low-Pass
Filter